Work Order ID 68677

Tuesday, April 19, 2011 3:59:39 PM

Item ID: D206-642-545 **Accept** **Setup Start** **Stop**

Revision ID:

Item Name: Skidtube

Start Date: 4/19/2011 **Start Qty:** 1.00 **Cust Item ID:**

Required Date: 5/16/2011 **Req'd Qty:** 1.00 **Customer:**

Reference:

Run Start **Stop**

Approvals: **Process Plan:** M **Date:** 11-04-9 **Tooling:** **Date:**

QC: **Date:** **SPC (Y/N):** **Date:**

Sequence ID/ Work Center ID	Operation Description	Set Up/ Run Hours	Tool ID	Tool #	Plan Code	Accept Qty	Reject Qty	Reject Number	Insp. Stamp
Draw Nbr: D3274	Revision Nbr: Rev D								
100	DOCUMENT CONTROL	0.00							
DC									
Document Control	**Memo** Photocopy bluefile & type labels per PPP D206-642-545 CHG002	0.00							

1 12.06.04

MLJ 12-6-4

68677

Dart Aerospace Ltd

W/O:		WORK ORDER CHANGES					
DATE	STEP	PROCEDURE CHANGE	By	Date	Qty	Approval Chief Eng / Prod Mgr	Approval QC Inspector

Part No: _____ **PAR #:** _____ **Fault Category:** _____ **NCR:** Yes No **DQA:** _____ **Date:** _____

Resolution: _____ **Disposition:** _____ **QA: N/C Closed:** _____ **Date:** _____

NCR:		WORK ORDER NON-CONFORMANCE (NCR)						
			Corrective Action Section B					
DATE	STEP	Description of NC Section A	Initial Chief Eng	Action Description Chief Eng	Sign & Date	Verification Section C	Approval Chief Eng	Approval QC Inspector

NOTE: Date & initial all entries

H:\fFORMS\Quality Assurance\approved QA\NCRWO RevE

Work Order ID 68677

Tuesday, April 19, 2011 3:59:39 PM

Item ID: D206-642-545 **Accept** **Setup Start** **Stop**

Revision ID:

Item Name: Skidtube

Start Date: 4/19/2011 **Start Qty:** 1.00 **Cust Item ID:**

Required Date: 5/16/2011 **Req'd Qty:** 1.00 **Customer:**

Reference:

Run Start **Stop**

Approvals: **Process Plan:** _____ **Date:** _____ **Tooling:** _____ **Date:** _____

QC: _____ **Date:** _____ **SPC (Y/N):** _____ **Date:** _____

Sequence ID/ Work Center ID	Operation Description	Set Up/ Run Hours	Tool ID	Tool #	Plan Code	Accept Qty	Reject Qty	Reject Number	Insp. Stamp
110		0.00							
Skidtubes	Skidtubes	0.00							
Skidtubes									

Memo

1- Fabricate as per Dwg: D3274-043.

2- Bend FWD end of tube using bend prog D3274 FWD dwg D3274, cut fwd end tube with saw table setup D3274

3- Remove fwd indexing ridge as per dwg D3274 and prepare for welding

4 -Weld Fwd Cap as per Dwg D3274 and QSI 004. ~~Use aluminum rod.~~
A/R☐☐Aluminum Rod☐ M112860 / ~~M117476~~ M115778

5- Grind welds flush to Fwd cap on top surface only.

6- Cut AFT end of tube at 170.9" as per dwg D3274 and deburr end.

7- Drill Aft cap pilot hole using DT8025

8 -Cleco DT8025 in position and install pilot hole drill Jig DT8891. Drill 3/16" pilot holes as per Dwg D3274

9- Remove inner indexing ridge on aft end of skidtube as per Dwg D3274 scribe batch#

10- Open aft end cap holes to Ø0.208" as per Dwg D3274. Deburr aft end.

DP 11-7-28 ~~11-5-26~~

DL ~~11/05/30~~ DL. 11/08/04

BG 11/08/09 ~~11/06/02~~

BG 11/08/09 ~~11/06/02~~

BB 11/08/09 ~~11/06/15~~

Dart Aerospace Ltd

W/O:		WORK ORDER CHANGES					
DATE	STEP	PROCEDURE CHANGE	By	Date	Qty	Approval Chief Eng / Prod Mgr	Approval QC Inspector

Part No: _____ **PAR #:** _____ **Fault Category:** _____ **NCR:** Yes No **DQA:** _____ **Date:** _____

Resolution: _____ **Disposition:** _____ **QA: N/C Closed:** _____ **Date:** _____

NCR:		WORK ORDER NON-CONFORMANCE (NCR)						
DATE	STEP	Description of NC Section A	Corrective Action Section B			Verification Section C	Approval Chief Eng	Approval QC Inspector
			Initial Chief Eng	Action Description Chief Eng	Sign & Date			

NOTE: Date & initial all entries

H:\fFORMS\Quality Assurance\approved QA\NCRWO RevE

Work Order ID 68677

Tuesday, April 19, 2011 3:59:39 PM

Item ID: D206-642-545 **Accept** **Setup** **Start**

Revision ID: **Stop**

Item Name: Skidtube

Start Date: 4/19/2011 **Start Qty:** 1.00 **Cust Item ID:**

Required Date: 5/16/2011 **Req'd Qty:** 1.00 **Customer:**

Reference:

Run **Start** **Stop**

Approvals: **Process Plan:** _____ **Date:** _____ **Tooling:** _____ **Date:** _____

QC: _____ **Date:** _____ **SPC (Y/N):** _____ **Date:** _____

Sequence ID/ Work Center ID	Operation Description	Set Up/ Run Hours	Tool ID	Tool #	Plan Code	Accept Qty	Reject Qty	Reject Number	Insp. Stamp
114	QC10- Inspect visual per QSI004- ground welds	0.00	~~8 u/08/11~~						
QC	Memo	0.00	8 u/08/10						
Quality Control									
116	QC5- Inspect part completeness to step on W/O	0.00	8 u/08/10						
QC	Memo	0.00	~~8 u/08/11~~						
Quality Control									
120	Chemical Conversion Coat per QSI005 4.1	0.00	~~A.E 11.08.17.~~						
HandFinish	Memo	0.00	A.E. 11.08.10.			1	Ø		
Hand Finishing									

Dart Aerospace Ltd

W/O:		WORK ORDER CHANGES					
DATE	STEP	PROCEDURE CHANGE	By	Date	Qty	Approval Chief Eng / Prod Mgr	Approval QC Inspector

Part No: _____ PAR #: _____ Fault Category: _____ NCR: Yes No DQA: _____ Date: _____

Resolution: _____ Disposition: _____ QA: N/C Closed: _____ Date: _____

NCR:		WORK ORDER NON-CONFORMANCE (NCR)						
DATE	STEP	Description of NC Section A	Corrective Action Section B			Verification Section C	Approval Chief Eng	Approval QC Inspector
			Initial Chief Eng	Action Description Chief Eng	Sign & Date			

NOTE: Date & initial all entries

H:\fFORMS\Quality Assurance\approved QA\NCRWO RevE

Work Order ID 68677

Tuesday, April 19, 2011 3:59:39 PM

Item ID: D206-642-545 **Accept** **Setup** **Start**

Revision ID: **Stop**

Item Name: Skidtube

Start Date: 4/19/2011 **Start Qty:** 1.00 **Cust Item ID:**

Required Date: 5/16/2011 **Req'd Qty:** 1.00 **Customer:**

Reference:

Run **Start** **Stop**

Approvals: **Process Plan:** _____ **Date:** _____ **Tooling:** _____ **Date:** _____

QC: _____ **Date:** _____ **SPC (Y/N):** _____ **Date:** _____

Sequence ID/ Work Center ID	Operation Description	Set Up/ Run Hours	Tool ID	Tool #	Plan Code	Accept Qty	Reject Qty	Reject Number	Insp. Stamp
130	~~QC3~~ QC7 - Inspect Part Finish	0.00							
QC	**Memo**	0.00				12-4-10			
Quality Control									
140		0.00							
Skidtubes	Skidtubes								
Skidtubes	**Memo**	0.00							

1-Open Ø0.313" and 0.375" crossbolt spacer holes as per Dwg D3274

2-deburr crossbolt spacer holes as per Dwg D3274 and blow out chips from inside the tube

11/08/12

3-Bond web in place as per Dwg D3274 & QSI 015.
A/R□□Sikaflex-291□ M120813 □□
Sikaflex expire date:□ 12-08-13 □
Start:□ 12-4-10 □Time:□ 14:20 □
Finish:□ 15:00 □Time:□ 12-4-10
(Adhere for 12 hours)

CF 12-4-10

PTO

Dart Aerospace Ltd

W/O: 68677		WORK ORDER CHANGES					
DATE	STEP	PROCEDURE CHANGE	By	Date	Qty	Approval Chief Eng / Prod Mgr	Approval QC Inspector
12-4-10	130	Should read QC7		12-4-10			

Part No: D206-642-545 PAR #: _____ Fault Category: _____ NCR: Yes No DQA: _____ Date: _____

Resolution: _____ Disposition: _____ QA: N/C Closed: _____ Date: _____

NCR:		WORK ORDER NON-CONFORMANCE (NCR)						
DATE	STEP	Description of NC Section A	Corrective Action Section B			Verification Section C	Approval Chief Eng	Approval QC Inspector
			Initial Chief Eng	Action Description Chief Eng	Sign & Date			

NOTE: Date & initial all entries

H:\fFORMS\Quality Assurance\approved QA\NCRWO RevE

Work Order ID 68677

Tuesday, April 19, 2011 3:59:39 PM

Item ID: D206-642-545 **Accept** **Setup Start**

Revision ID: **Stop**

Item Name: Skidtube

Start Date: 4/19/2011 **Start Qty:** 1.00 **Cust Item ID:**

Required Date: 5/16/2011 **Req'd Qty:** 1.00 **Customer:**

Reference:

Run Start

Approvals: **Process Plan:** _____ **Date:** _____ **Tooling:** _____ **Date:** _____

Stop

QC: _____ **Date:** _____ **SPC (Y/N):** _____ **Date:** _____

Sequence ID/ Work Center ID	Operation Description	Set Up/ Run Hours	Tool ID	Tool #	Plan Code	Accept Qty	Reject Qty	Reject Number	Insp. Stamp
150	QC5- Inspect part completeness to step on W/O	0.00				1	0		BE 12/04/11
QC Quality Control	**Memo**	0.00							

Dart Aerospace Ltd

W/O:		WORK ORDER CHANGES					
DATE	STEP	PROCEDURE CHANGE	By	Date	Qty	Approval Chief Eng / Prod Mgr	Approval QC Inspector

Part No: _____ PAR #: _____ Fault Category: _____ NCR: Yes No DQA: _____ Date: _____

Resolution: _____ Disposition: _____ QA: N/C Closed: _____ Date: _____

NCR:		WORK ORDER NON-CONFORMANCE (NCR)						
DATE	STEP	Description of NC Section A	Corrective Action Section B			Verification Section C	Approval Chief Eng	Approval QC Inspector
			Initial Chief Eng	Action Description Chief Eng	Sign & Date			

NOTE: Date & initial all entries

H:\fFORMS\Quality Assurance\approved QA\NCRWO RevE

Work Order ID 68677

Tuesday, April 19, 2011 3:59:39 PM

Item ID: D206-642-545 **Accept** **Setup Start** **Stop**

Revision ID:

Item Name: Skidtube

Start Date: 4/19/2011 **Start Qty:** 1.00 **Cust Item ID:**

Required Date: 5/16/2011 **Req'd Qty:** 1.00 **Customer:**

Reference:

Approvals: **Process Plan:** _____ **Date:** _____ **Tooling:** _____ **Date:** _____ **Run Start** **Stop**

QC: _____ **Date:** _____ **SPC (Y/N):** _____ **Date:** _____

Sequence ID/ Work Center ID	Operation Description	Set Up/ Run Hours	Tool ID	Tool #	Plan Code	Accept Qty	Reject Qty	Reject Number	Insp. Stamp
160		0.00							
Skidtubes	Skidtubes	0.00							

Memo

1-Bend AFT end of tube using bend prog. D3274 AFT as per dwg D3274. Install drop pins in crossbolt spacer holes to maintain web position. — SAD 12-04-11

2-DRILL PILOT HOLES FOR WEARPLATES USING D3274-1T2
OPEN HOLES TO .297"

3-DRILL TOE PIN HOLE .640" DIA AS PER DWG USING DT8935 FWD END OF TUBE
DEBURR INSIDE OF HOLE AS NECESSARY (DO NOT ENLARGE HOLES)
REMOVE ANY FOREIGN OBJECTS INSIDE OF TUBES

4- Countersink crossbolt spacer holes as per Dwg D3274

5- prepare for welding

CF 12-4-12

6-Insert D2649 & D3275-1 crossbolt spacers. Weld as per QSI 004 and Dwg D3274. Remember to back drill each hole before welding the other side. Use aluminum rod
A/R□□Aluminum Rod□ M20164 BE 12-05-11

7-Grind cross bolt welds flush as per Dwg D3274. —> CF 12-5-14

8-Counterbore 5/16" x 0.750" deep as per Dwg D3274. Use DT8743 visual aid Jig and deburr. — DC/CC 17-5-14

Dart Aerospace Ltd

W/O:		WORK ORDER CHANGES					
DATE	STEP	PROCEDURE CHANGE	By	Date	Qty	Approval Chief Eng / Prod Mgr	Approval QC Inspector

Part No: _____ **PAR #:** _____ **Fault Category:** _____ **NCR:** Yes No **DQA:** _____ **Date:** _____

Resolution: _____ **Disposition:** _____ **QA: N/C Closed:** _____ **Date:** _____

NCR:		WORK ORDER NON-CONFORMANCE (NCR)						
DATE	STEP	Description of NC Section A	Corrective Action Section B			Verification Section C	Approval Chief Eng	Approval QC Inspector
			Initial Chief Eng	Action Description Chief Eng	Sign & Date			

NOTE: Date & initial all entries

H:\fFORMS\Quality Assurance\approved QA\NCRWO RevE

Work Order ID 68677

Tuesday, April 19, 2011 3:59:39 PM

Item ID: D206-642-545 **Accept** **Setup** **Start** **Stop**

Revision ID:

Item Name: Skidtube

Start Date: 4/19/2011 **Start Qty:** 1.00 **Cust Item ID:**

Required Date: 5/16/2011 **Req'd Qty:** 1.00 **Customer:**

Reference:

Run **Start** **Stop**

Approvals: **Process Plan:** _____ **Date:** _____ **Tooling:** _____ **Date:** _____

QC: _____ **Date:** _____ **SPC (Y/N):** _____ **Date:** _____

Sequence ID/ Work Center ID	Operation Description	Set Up/ Run Hours	Tool ID	Tool #	Plan Code	Accept Qty	Reject Qty	Reject Number	Insp. Stamp
170	QC10- Inspect visual per QSI004- ground welds	0.00							
QC	**Memo**	0.00	8 12/05/15						
Quality Control									
180	QC5- Inspect part completeness to step on W/O	0.00							
QC	**Memo**	0.00	8 12/05/15			(4)			
Quality Control									
190	Pressure Wash per QSI005 4.3	0.00							
HandFinish	**Memo**	0.00				1	8	(2P)	12/05/15
Hand Finishing	Re-alodine tube as per QSI 005 section 4.1.2.1 do not acid etch and leave fwd cap out of solution.								

Dart Aerospace Ltd

W/O:		WORK ORDER CHANGES					
DATE	STEP	PROCEDURE CHANGE	By	Date	Qty	Approval Chief Eng / Prod Mgr	Approval QC Inspector

Part No: _____ PAR #: _____ Fault Category: _____ NCR: Yes No DQA: _____ Date: _____

Resolution: _____ Disposition: _____ QA: N/C Closed: _____ Date: _____

NCR:		WORK ORDER NON-CONFORMANCE (NCR)						
DATE	STEP	Description of NC Section A	Corrective Action Section B			Verification Section C	Approval Chief Eng	Approval QC Inspector
			Initial Chief Eng	Action Description Chief Eng	Sign & Date			

NOTE: Date & initial all entries

H:\fFORMS\Quality Assurance\approved QA\NCRWO RevE

Work Order ID 68677

Tuesday, April 19, 2011 3:59:39 PM

Item ID: D206-642-545 **Accept** **Setup Start** **Stop**

Revision ID:

Item Name: Skidtube

Start Date: 4/19/2011 **Start Qty:** 1.00 **Cust Item ID:**

Required Date: 5/16/2011 **Req'd Qty:** 1.00 **Customer:**

Reference:

Run Start **Stop**

Approvals: **Process Plan:** _____ **Date:** _____ **Tooling:** _____ **Date:** _____

QC: _____ **Date:** _____ **SPC (Y/N):** _____ **Date:** _____

Sequence ID/ Work Center ID	Operation Description	Set Up/ Run Hours	Tool ID	Tool #	Plan Code	Accept Qty	Reject Qty	Reject Number	Insp. Stamp
200	White Gloss(Ref:4.3.5.1) per QSI005 4.3-Alum	0.00				1X	Ø		MK 12/05/16
Powdercoat	**Memo**	0.00							
Powder Coating	START TIME: 2:45 OVEN TEMPERATURE: 320°F FINISH TIME: 3:15 M121134								
210	QC3- Inspect Part Finish	0.00				1	0		BR 12-5-17
QC	**Memo**	0.00							
Quality Control									
220	HAND FINISHING RESOURCE #1	0.00				1	~~0~~	SP	12/05/17
HandFinish	**Memo**	0.00							
Hand Finishing	1-Install Nut Plate as per Dwg D3274. Apply LPS-3 to Nut Plate and rivets. A/R☐N/A☐LPS-3☐ 114596 2-Install inserts as per Dwg D3274. Use a drop of Sikaflex inside insert holes a A/R☐☐Sikaflex-291 ☐ 121221 ☐☐ Sikaflex expire date: ☐ 13/01								

Dart Aerospace Ltd

W/O:		WORK ORDER CHANGES					
DATE	STEP	PROCEDURE CHANGE	By	Date	Qty	Approval Chief Eng / Prod Mgr	Approval QC Inspector

Part No: _____ **PAR #:** _____ **Fault Category:** _____ **NCR:** Yes No **DQA:** _____ **Date:** _____

Resolution: _____ **Disposition:** _____ **QA: N/C Closed:** _____ **Date:** _____

NCR:		WORK ORDER NON-CONFORMANCE (NCR)						
DATE	STEP	Description of NC Section A	Corrective Action Section B			Verification Section C	Approval Chief Eng	Approval QC Inspector
			Initial Chief Eng	Action Description Chief Eng	Sign & Date			

NOTE: Date & initial all entries

H:\fFORMS\Quality Assurance\approved QA\NCRWO RevE

Work Order ID 68677

Tuesday, April 19, 2011 3:59:39 PM

Item ID: D206-642-545 **Accept** **Setup Start** **Stop**

Revision ID:

Item Name: Skidtube

Start Date: 4/19/2011 **Start Qty:** 1.00 **Cust Item ID:**

Required Date: 5/16/2011 **Req'd Qty:** 1.00 **Customer:**

Reference:

Run Start **Stop**

Approvals: **Process Plan:** **Date:** **Tooling:** **Date:**

QC: **Date:** **SPC (Y/N):** **Date:**

Sequence ID/ Work Center ID	Operation Description	Set Up/ Run Hours	Tool ID	Tool #	Plan Code	Accept Qty	Reject Qty	Reject Number	Insp. Stamp
230	QC5- Inspect part completeness to step on W/O	0.00							
QC	**Memo**	0.00 5/12/17							
Quality Control	Inspect Nut Plate & Inserts								
240		0.00							
HandFinish	HandFinishing								
Hand Finishing	**Memo**	0.00							

1 12/05/22.

1-Install wearpads & gaskets as per Dwg D3274.

2-Install ring as per Dwg D3274
A/R☐☐Sikaflex-291 ☐ 12/22 ☐☐
Sikaflex expire date: ☐ 13/01

3-Inspect for foreign objects as per QSI 024

4-Spray inside of tube on both sides of web with LPS-3
A/R LPS-3 Batch: N/A

5-Install Aft Cap and seal with Sikaflex. Clean excess adhesive.
A/R☐☐Sikaflex-291 ☐ 12/22 ☐☐
Sikaflex expire date: ☐ 13/01

Dart Aerospace Ltd

W/O:		WORK ORDER CHANGES					
DATE	STEP	PROCEDURE CHANGE	By	Date	Qty	Approval Chief Eng / Prod Mgr	Approval QC Inspector

Part No: _____ PAR #: _____ Fault Category: _____ NCR: Yes No DQA: _____ Date: _____

Resolution: _____ Disposition: _____ QA: N/C Closed: _____ Date: _____

NCR:		WORK ORDER NON-CONFORMANCE (NCR)						
DATE	STEP	Description of NC Section A	Corrective Action Section B			Verification Section C	Approval Chief Eng	Approval QC Inspector
			Initial Chief Eng	Action Description Chief Eng	Sign & Date			

NOTE: Date & initial all entries

H:\fFORMS\Quality Assurance\approved QA\NCRWO RevE

Work Order ID 68677

Tuesday, April 19, 2011 3:59:39 PM

Item ID: D206-642-545 **Accept** **Setup Start** **Stop**

Revision ID:

Item Name: Skidtube

Start Date: 4/19/2011 **Start Qty:** 1.00 **Cust Item ID:**

Required Date: 5/16/2011 **Req'd Qty:** 1.00 **Customer:**

Reference:

Run Start **Stop**

Approvals: **Process Plan:** _____ **Date:** _____ **Tooling:** _____ **Date:** _____

QC: _____ **Date:** _____ **SPC (Y/N):** _____ **Date:** _____

Sequence ID/ Work Center ID	Operation Description	Set Up/ Run Hours	Tool ID	Tool #	Plan Code	Accept Qty	Reject Qty	Reject Number	Insp. Stamp
250	QC5- Inspect part completeness to step on W/O	0.00							
QC	**Memo**	0.00							
Quality Control									
260		0.00							
Packaging	Packaging								
Packaging	**Memo**	0.00							
	Identify and pack for shipping as per PPP D206-642-545 Location:_____ PPP rev:_____								
270	QC21- Final Inspection - Work Order Release	0.00							
QC	**Memo**	0.00							
Quality Control									

S 12/05/23

12/6/4 (1)

12/6/6

12-06-05

Dart Aerospace Ltd

W/O:		WORK ORDER CHANGES						
DATE	STEP	PROCEDURE CHANGE	By	Date	Qty	Approval Chief Eng / Prod Mgr	Approval QC Inspector

Part No: _____ **PAR #:** _____ **Fault Category:** _____ **NCR:** Yes No **DQA:** _____ **Date:** _____

Resolution: _____ **Disposition:** _____ **QA: N/C Closed:** _____ **Date:** _____

NCR:		WORK ORDER NON-CONFORMANCE (NCR)						
DATE	STEP	Description of NC Section A	Corrective Action Section B			Verification Section C	Approval Chief Eng	Approval QC Inspector
			Initial Chief Eng	Action Description Chief Eng	Sign & Date			

NOTE: Date & initial all entries

H:\fFORMS\Quality Assurance\approved QA\NCRWO RevE

Picklist Print

Tuesday, April 19, 2011 3:59:45 PM

8

Work Order ID: 68677

Parent Item: D206-642-545

Parent Item Name: Skidtube

Start Date: 4/19/2011 **Required Date:** 5/16/2011

Start Qty: 1.00 **Required Qty:** 1.00

Comments:
IPP Rev:A New Issue 06-10-06 JLM
IPP Rev:B Added SS Wearplates & Gaskets 07-02-23 JLM
IPP Rev:C ECN 1080p 07-12-06 DD verified by:
IPP Rev:D as per PAR 08-015 08-04-17 DD verified by:ec
IPP Rev:E 08-10-09 revise details DD verified by:EC

Component Item ID/ Item Name	Replacement Item ID	Mfg/ Purch	Bin Item	Primary Location	Last Location	Route Seq ID	Unit of Measure	Qty on Hand	Qty per Kit	Total Qty	Qty Issued	Date Issued	Status
D2600-1-190		Manufactured	No			110	Each	34.4000	1	1	1	11-7-28	
Extrusion Round 3" 206													
				Location		Loc Qty		Loc Code					
				B69622 HALL		34.4							
				39874		34.4							
D3285-1		Manufactured	No			110	Each	110.0000	1	1		11-5-26	
Cap												DEL 11/05/02	
				Location		Loc Qty		Loc Code					
				LG002		110							
				52511		63					1		
				52647		47							
D3282-041		Manufactured	No			140	Each	9.0000	1	1	1	CF 12-4-10	
Float Web (206L/407)													
				B80837									
				Location		Loc Qty		Loc Code					
				LG		9							
				65293		2							
				66363		7							

Dart Aerospace Ltd

W/O:		WORK ORDER CHANGES					
DATE	STEP	PROCEDURE CHANGE	By	Date	Qty	Approval Chief Eng / Prod Mgr	Approval QC Inspector

Part No: _____ **PAR #:** _____ **Fault Category:** _____ **NCR:** Yes No **DQA:** _____ **Date:** _____

Resolution: _____ **Disposition:** _____ **QA: N/C Closed:** _____ **Date:** _____

NCR:		WORK ORDER NON-CONFORMANCE (NCR)						
DATE	STEP	Description of NC Section A	Corrective Action Section B			Verification Section C	Approval Chief Eng	Approval QC Inspector
			Initial Chief Eng	Action Description Chief Eng	Sign & Date			

NOTE: Date & initial all entries

H:\fFORMS\Quality Assurance\approved QA\NCRWO RevE

Picklist Print

Tuesday, April 19, 2011 3:59:46 PM

Work Order ID: 68677

Parent Item: D206-642-545

Parent Item Name: Skidtube

Start Date: 4/19/2011 **Required Date:** 5/16/2011

Start Qty: 1.00 **Required Qty:** 1.00

D2649	Manufactured	No	160	Each	86.0000	12	12	BE 12/05/10 B79566 ×12
Cross Bolt Spacer								

Location		Loc Qty	Loc Code
LG		85	
	68224	85	
LG001		1	
	65317	1	

D3275-1	Manufactured	No	160	Each	214.0000	37	37	BE 12/05/10 B80184 ×23 B83264 ×14
Crossbolt Spacer								

Location		Loc Qty	Loc Code
LG		71	
	67767	71	
LG002		143	
	66109	35	
	66930	108	

CCR264SS3-3	Purchased	No	220	Each	163.0000	2	2	2 12/05/17
Cherry Rivet								

Location		Loc Qty	Loc Code
FP-B	117849	2	
	113973	2	
ST311		161	
	113973	2	
	117086	159	

Dart Aerospace Ltd

W/O:		WORK ORDER CHANGES					
DATE	STEP	PROCEDURE CHANGE	By	Date	Qty	Approval Chief Eng / Prod Mgr	Approval QC Inspector

Part No: _____ **PAR #:** _____ **Fault Category:** _____ **NCR:** Yes No **DQA:** _____ **Date:** _____

Resolution: _____ **Disposition:** _____ **QA: N/C Closed:** _____ **Date:** _____

NCR:		WORK ORDER NON-CONFORMANCE (NCR)						
DATE	STEP	Description of NC Section A	Corrective Action Section B			Verification Section C	Approval Chief Eng	Approval QC Inspector
			Initial Chief Eng	Action Description Chief Eng	Sign & Date			

NOTE: Date & initial all entries

H:\fFORMS\Quality Assurance\approved QA\NCRWO RevE

Picklist Print

Tuesday, April 19, 2011 3:59:46 PM

Work Order ID: 68677

Parent Item: D206-642-545

Parent Item Name: Skidtube

Start Date: 4/19/2011 **Required Date:** 5/16/2011

Start Qty: 1.00 **Required Qty:** 1.00

CR3212-4-03 Cherry Rivet	Purchased	No	220	Each	1,262.000	2	2	2 SP 12/05/17

Location	Loc Qty	Loc Code
FP-B	16	
110139	16	
ST311	1246	
114859 ✓	1246	

D3415-041 Nut Plate	Manufactured	No	220	Each	51.0000	1	1	1 SP 12/05/17

Location	Loc Qty	Loc Code
82151 ✓ ST053 ~~82161~~	51	
33842	7	
67605	44	

ALS7-1032-130 Insert	Purchased	No	240	Each	449.0000	78	78	78 SP 12/05/17

Location	Loc Qty	Loc Code
ST281 121269.	200	
117331	200	
ST282	249	
116800	249	

AN3C4A BOLT	Purchased	No	240	Each	2,358.000	80	80	80 SP 12/05/17

Location	Loc Qty	Loc Code
ST350 121556 ✓	2358	
116924	358	
117094	1000	
117313	1000	

Dart Aerospace Ltd

W/O:		WORK ORDER CHANGES					
DATE	STEP	PROCEDURE CHANGE	By	Date	Qty	Approval Chief Eng / Prod Mgr	Approval QC Inspector

Part No: _____ **PAR #:** _____ **Fault Category:** _____ **NCR:** Yes No **DQA:** _____ **Date:** _____

Resolution: _____ **Disposition:** _____ **QA: N/C Closed:** _____ **Date:** _____

NCR:		WORK ORDER NON-CONFORMANCE (NCR)						
DATE	STEP	Description of NC Section A	Corrective Action Section B			Verification Section C	Approval Chief Eng	Approval QC Inspector
			Initial Chief Eng	Action Description Chief Eng	Sign & Date			

NOTE: Date & initial all entries

H:\fFORMS\Quality Assurance\approved QA\NCRWO RevE

Picklist Print

Tuesday, April 19, 2011 3:59:46 PM

Work Order ID: 68677

Parent Item: D206-642-545

Parent Item Name: Skidtube

Start Date: 4/19/2011 **Required Date:** 5/16/2011

Start Qty: 1.00 **Required Qty:** 1.00

AN4C5A		Purchased	No		240	Each	543.0000	1	1	1	12/05/17
BOLT											

Location		Loc Qty	Loc Code
FP-B		116	
	112243	116	
ST345		427	
	112243	427	

AN960C10L	NAS1149C0332R	Purchased	No		240	Each	0.0000	80	80	80	12/05/17
washer				121509							
AN960C416	NAS1149C0463R	Purchased	No		240	Each	15.0000	1	1	1	12/05/17
washer				119097							

Location		Loc Qty	Loc Code
ST346		15	
	100993	15	

D2646		Manufactured	No		240	Each	56.0000	1	1	1	12/05/17
Aft Cap											

Location		Loc Qty	Loc Code
FP006	78018	56	
	62678	56	

Dart Aerospace Ltd

W/O:		WORK ORDER CHANGES						
DATE	STEP	PROCEDURE CHANGE	By	Date	Qty	Approval Chief Eng / Prod Mgr	Approval QC Inspector

Part No: _____ **PAR #:** _____ **Fault Category:** _____ **NCR:** Yes No **DQA:** _____ **Date:** _____

Resolution: _____ **Disposition:** _____ **QA: N/C Closed:** _____ **Date:** _____

NCR:		WORK ORDER NON-CONFORMANCE (NCR)						
DATE	STEP	Description of NC Section A	Corrective Action Section B			Verification Section C	Approval Chief Eng	Approval QC Inspector
			Initial Chief Eng	Action Description Chief Eng	Sign & Date			

NOTE: Date & initial all entries

H:\fFORMS\Quality Assurance\approved QA\NCRWO RevE

Picklist Print

Tuesday, April 19, 2011 3:59:47 PM

Work Order ID: 68677

Parent Item: D206-642-545

Parent Item Name: Skidtube

Start Date: 4/19/2011 **Required Date:** 5/16/2011

Start Qty: 1.00 **Required Qty:** 1.00

D3413-1	Manufactured	No	240	Each	47.0000	1	1	1 (DP) 12/05/17
Ring								

Location	Loc Qty	Loc Code
ST420 80224	22	
62961	8	
66387	14	
ST473	25	
53446	1	
65294	10	
66945	14	

D3535-15	Manufactured	No	240	Each	16.0000	1	1	1 (DP) 12/05/17
Wearshoe								

Location	Loc Qty	Loc Code
FP018 80328	16	
66238	4	
66558	12	

D3535-23	Manufactured	No	240	Each	15.0000	1	1	1 (DP) 12/05/17
Wearshoe								

Location	Loc Qty	Loc Code
FP021 ~~80224~~	15	
63571	1	
66236	1	
67594	13	
81355		

Dart Aerospace Ltd

W/O:		WORK ORDER CHANGES					
DATE	STEP	PROCEDURE CHANGE	By	Date	Qty	Approval Chief Eng / Prod Mgr	Approval QC Inspector

Part No: _____ **PAR #:** _____ **Fault Category:** _____ **NCR:** Yes No **DQA:** _____ **Date:** _____

Resolution: _____ **Disposition:** _____ **QA: N/C Closed:** _____ **Date:** _____

NCR:		WORK ORDER NON-CONFORMANCE (NCR)						
DATE	STEP	Description of NC Section A	Corrective Action Section B			Verification Section C	Approval Chief Eng	Approval QC Inspector
			Initial Chief Eng	Action Description Chief Eng	Sign & Date			

NOTE: Date & initial all entries

H:\fFORMS\Quality Assurance\approved QA\NCRWO RevE

Picklist Print

Tuesday, April 19, 2011 3:59:47 PM

Work Order ID: 68677

Parent Item: D206-642-545

Parent Item Name: Skidtube

Start Date: 4/19/2011 **Required Date:** 5/16/2011

Start Qty: 1.00 **Required Qty:** 1.00

D3535-35	Manufactured	No	240	Each	18.0000	1	1	1 12/05/17
Wearshoe								

Location	Loc Qty	Loc Code
FP018 83638	18	
65926	10	
67598	8	

D3535-39	Manufactured	No	240	Each	12.0000	1	1	1 12/05/17
Wearshoe								

Location	Loc Qty	Loc Code
FP018 74513	12	
64076	12	

D3536-15	Manufactured	No	240	Each	29.0000	1	1	1 12/05/17
Gasket								

Location	Loc Qty	Loc Code
FP011 81343	29	
63568	3	
66559	26	

D3536-23	Manufactured	No	240	Each	34.0000	1	1	1 12/05/17
Gasket								

Location	Loc Qty	Loc Code
FP011 83377	34	
43406	1	
53468	1	
63238	1	
66240	6	
66560	25	

Dart Aerospace Ltd

W/O:		WORK ORDER CHANGES						
DATE	STEP	8 PROCEDURE CHANGE	By	Date	Qty	Approval Chief Eng / Prod Mgr	Approval QC Inspector

Part No: _____ **PAR #:** _____ **Fault Category:** _____ **NCR:** Yes No **DQA:** _____ **Date:** _____

Resolution: _____ **Disposition:** _____ **QA: N/C Closed:** _____ **Date:** _____

NCR:		WORK ORDER NON-CONFORMANCE (NCR)						
DATE	STEP	Description of NC Section A	Corrective Action Section B			Verification Section C	Approval Chief Eng	Approval QC Inspector
			Initial Chief Eng	Action Description Chief Eng	Sign & Date			

NOTE: Date & initial all entries

H:\fFORMS\Quality Assurance\approved QA\NCRWO RevE

Picklist Print

Tuesday, April 19, 2011 3:59:47 PM

Work Order ID: 68677

Parent Item: D206-642-545

Parent Item Name: Skidtube

Start Date: 4/19/2011 **Required Date:** 5/16/2011

Start Qty: 1.00 **Required Qty:** 1.00

D3536-35	Manufactured	No	240	Each	23.0000	1	1	1 SP 12/05/17
Gasket								

Location	Loc Qty	Loc Code
FP012 81340	23	
66237	11	
67599	12	

D3536-39	Manufactured	No	240	Each	17.0000	1	1	1 SP 12/05/17
Gasket								

Location	Loc Qty	Loc Code
FP015 82252	17	
63578	5	
66241	12	

D3537-1	Manufactured	No	240	Each	54.0000	9	9	9 SP 12/05/22
Wearpad								

Location	Loc Qty	Loc Code
FP017 81360	54	
63313	2	
66935	52	

D3537-3	Manufactured	No	240	Each	15.0000	1	1	1 SP 12/05/17
Wearpad								

Location	Loc Qty	Loc Code
FP017 81363	15	
35697	1	
65929	14	

Dart Aerospace Ltd

W/O:		WORK ORDER CHANGES					
DATE	STEP	PROCEDURE CHANGE	By	Date	Qty	Approval Chief Eng / Prod Mgr	Approval QC Inspector

Part No: _____ **PAR #:** _____ **Fault Category:** _____ **NCR:** Yes No **DQA:** _____ **Date:** _____

Resolution: _____ **Disposition:** _____ **QA: N/C Closed:** _____ **Date:** _____

NCR:		WORK ORDER NON-CONFORMANCE (NCR)						
DATE	STEP	Description of NC Section A	Corrective Action Section B			Verification Section C	Approval Chief Eng	Approval QC Inspector
			Initial Chief Eng	Action Description Chief Eng	Sign & Date			

NOTE: Date & initial all entries

H:\fFORMS\Quality Assurance\approved QA\NCRWO RevE

Picklist Print

Tuesday, April 19, 2011 3:59:47 PM

Work Order ID: 68677

Parent Item: D206-642-545

Parent Item Name: Skidtube

Start Date: 4/19/2011 **Required Date:** 5/16/2011

Start Qty: 1.00 **Required Qty:** 1.00

D3672-1	Manufactured	No	240	Each	1,387.000	2	2	2	12/05/07

Phenolic Washer

Location	Loc Qty	Loc Code
FP-A	37	
52505	37	
ST074	1350	
64177	850	
66821	500	

76277

Dart Aerospace Ltd

W/O:		WORK ORDER CHANGES					
DATE	STEP	PROCEDURE CHANGE	By	Date	Qty	Approval Chief Eng / Prod Mgr	Approval QC Inspector

Part No: _____ **PAR #:** _____ **Fault Category:** _____ **NCR:** Yes No **DQA:** _____ **Date:** _____

Resolution: _____ **Disposition:** _____ **QA: N/C Closed:** _____ **Date:** _____

NCR:		WORK ORDER NON-CONFORMANCE (NCR)						
DATE	STEP	Description of NC Section A	Corrective Action Section B			Verification Section C	Approval Chief Eng	Approval QC Inspector
			Initial Chief Eng	Action Description Chief Eng	Sign & Date			

NOTE: Date & initial all entries

H:\fFORMS\Quality Assurance\approved QA\NCRWO RevE

DESIGN	DRAWN BY	DART AEROSPACE USA, INC. PORT HADLOCK, WA
CP	PH	
CHECKED	APPROVED	DRAWING NO. D3274 — REV. D — SHEET 1 OF 4
DATE 06.12.19		TITLE SKIDTUBE ASSEMBLY — SCALE NTS

A	04.03.15	NEW ISSUE
B	04.08.09	MOVE SADDLE HOLE: 42.14 WAS 42.76
C	05.03.16	ADD −043; NEW INSERTS
D	06.12.19	NEW INSERTS, SS WEARSHOE + GASKET

RELEASED
07.02.12
DEO ATTACHED

Qty -041	Qty -043	Part Number	Description
X		D3274-041	SKIDTUBE ASSEMBLY
	X	D3274-043	SKIDTUBE ASSEMBLY
1	1	D2600-1-240	EXTRUSION
1	1	D2646	AFT CAP
12	12	D2649	CROSS BOLT SPACER
12	37	D3275-1	CROSS BOLT SPACER
1	1	D3282-041	FLOAT WEB
1	1	D3285-1	CAP
1	1	D3413-1	RING
1	1	D3415-041	NUT PLATE
1	1	D3535-15	WEARSHOE
1	1	D3535-23	WEARSHOE
1	1	D3535-35	WEARSHOE
1	1	D3535-39	WEARSHOE
1	1	D3536-15	GASKET
1	1	D3536-23	GASKET
1	1	D3536-35	GASKET
1	1	D3536-39	GASKET
9	9	D3537-1	WEARPAD
1	1	D3537-3	WEARPAD
78	78	ALS7-1032-130	INSERT (or AKS4-1032-130, ALS4-1032-130, AELS-1032-130)
80	80	AN3C4A	BOLT
1	1	AN4C5A	BOLT
1	1	AN960C416	WASHER
80	80	AN960C10L	WASHER
2	2	CCR264SS3-3	RIVET
2	2	CR3212-4-03	RIVET
2	2	NAS1515H3L	WASHER

UNCONTROLLED COPY
SUBJECT TO CHANGE WITHOUT NOTICE
WORK ORDER NO. 08677
PS 11-04-19

GENERAL NOTES:

1. TOLERANCES ARE PER DART QSI 018 UNLESS OTHERWISE NOTED.
2. DAMAGE TOLERANCE ON FWD BEND:
   THERE SHOULD BE NO VISIBLE WRINKLES IN THE BEND FROM THE GROUND TO A HEIGHT OF 7 INCHES ABOVE THE GROUND. IT IS ACCEPTABLE TO POLISH OUT GOUGES UP TO 0.020 DEEP IN THE BENT PORTION OF THE TUBE. A MAXIMUM REDUCTION IN DIAMETER OF 0.150" IS ACCEPTABLE IN THE BENT PORTION OF THE TUBE.
3. ALL HOLES DRILLED ON CENTERLINES.
4. BOND D3282-041 FLOAT WEB INTO D3274-1/-3 OUTER TUBE WITH NON-STRUCTURAL SIKAFLEX-241/291 ADHESIVE PER DART QSI 015. ENSURE HOLES LINE-UP.
5. WELDING TO BE DONE PER DART QSI 004.
6. FINISH: - ACID ETCH, ALODINE ASSEMBLY PER DART QSI 005 4.1
   - POWDER COAT WHITE (REF. 4.3.5.1) PER DART QSI 005 4.3
7. DRILL Ø0.297 HOLES FOR ALS7-1032-130 INSERTS USING DT3274-1T2 BEFORE FINISH. INSTALL ALS7-1032-130 INSERTS AFTER FINISH. SEAL WEARSHOE BOLTS WITH SIKAFLEX -241/-291.
8. SPRAY INSIDE OF TUBE WITH A COAT OF LPS LABORATORIES "LPS-3" AFTER FINISH AND INSTALLATION OF INSERTS. COAT ALL EXPOSED FASTENERS WITH LPS LABORATORIES "LPS PROCYON" AFTER FINAL ASSEMBLY, CLEAN EXCESS OFF POWDER COATING WITH MEK DEGREASER.

Copyright © 2004 by DART AEROSPACE USA, INC.
THIS DOCUMENT IS PRIVATE AND CONFIDENTIAL AND IS SUPPLIED ON THE EXPRESS CONDITION THAT IT IS NOT TO BE USED FOR ANY PURPOSE OR COPIED OR COMMUNICATED TO ANY OTHER PERSON WITHOUT WRITTEN PERMISSION FROM DART AEROSPACE USA, INC.

Dart Aerospace Ltd

W/O:		WORK ORDER CHANGES					
DATE	STEP	PROCEDURE CHANGE	By	Date	Qty	Approval Chief Eng / Prod Mgr	Approval QC Inspector

Part No: _____ **PAR #:** _____ **Fault Category:** _____ **NCR:** Yes No **DQA:** _____ **Date:** _____

Resolution: _____ **Disposition:** _____ **QA: N/C Closed:** _____ **Date:** _____

NCR:		WORK ORDER NON-CONFORMANCE (NCR)						
DATE	STEP	Description of NC Section A	Corrective Action Section B			Verification Section C	Approval Chief Eng	Approval QC Inspector
			Initial Chief Eng	Action Description Chief Eng	Sign & Date			

NOTE: Date & initial all entries

H:\fFORMS\Quality Assurance\approved QA\NCRWO RevE

w/o 68677

DEO ATTACHED

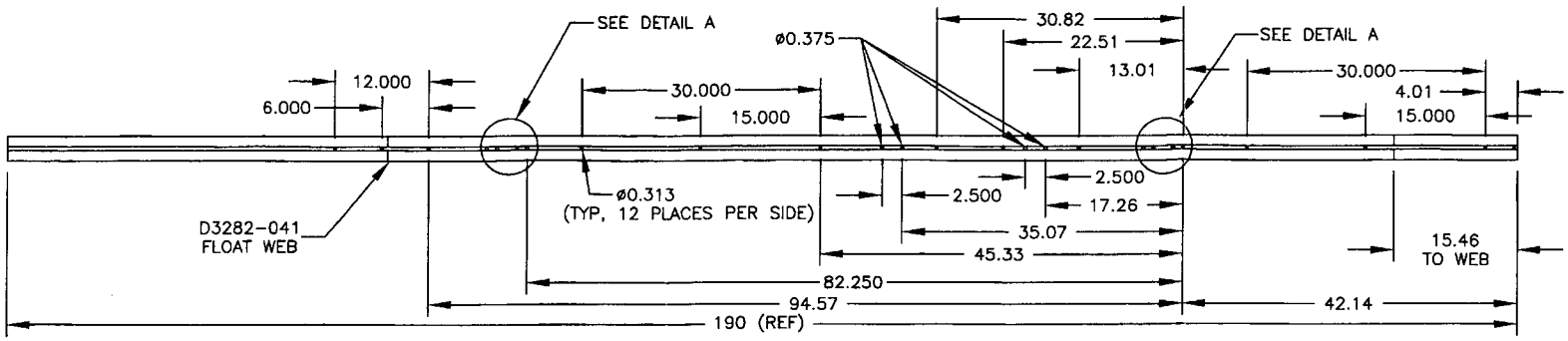

D3274-041 DRILLING/ASSEMBLY DETAIL

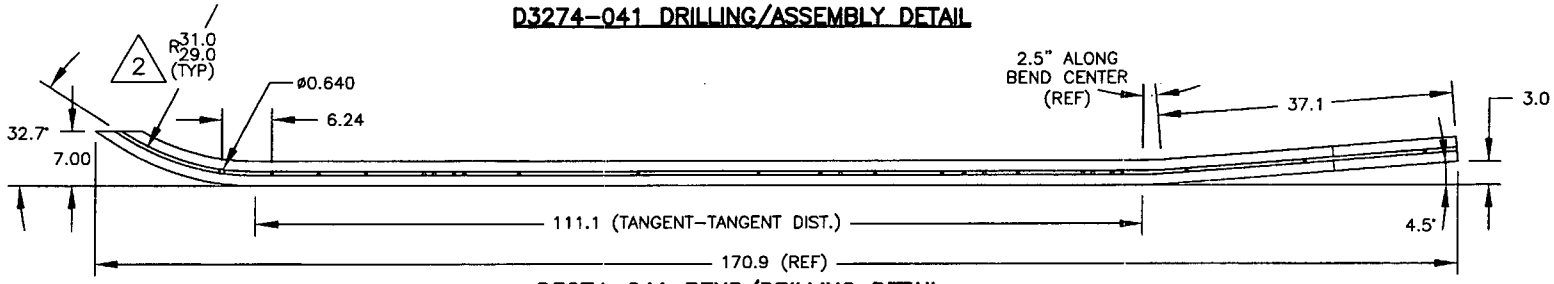

D3274-041 BEND/DRILLING DETAIL

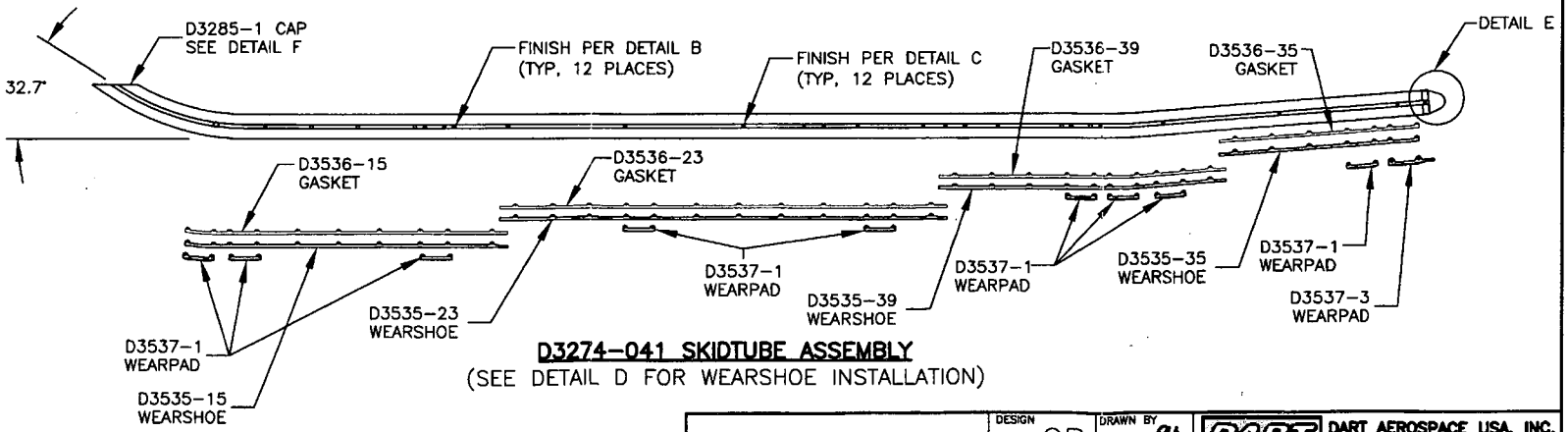

D3274-041 SKIDTUBE ASSEMBLY

(SEE DETAIL D FOR WEARSHOE INSTALLATION)

RELEASED
07.02.12

COPYRIGHT © 2004 BY DART AEROSPACE USA, INC.

THIS DOCUMENT IS PRIVATE AND CONFIDENTIAL AND IS SUPPLIED ON THE EXPRESS CONDITION THAT IT IS NOT TO BE USED FOR ANY PURPOSE OR COPIED OR COMMUNICATED TO ANY OTHER PERSON WITHOUT WRITTEN PERMISSION FROM DART AEROSPACE USA, INC.

DESIGN: CP	DRAWN BY: PH	DART AEROSPACE USA, INC. PORT HADLOCK, WA	
CHECKED:	APPROVED:	DRAWING NO. D3274	REV. D SHEET 2 OF 4
DATE: 06.12.19		TITLE: SKIDTUBE ASSEMBLY	SCALE: 1:15

Dart Aerospace Ltd

W/O:		WORK ORDER CHANGES					
DATE	STEP	PROCEDURE CHANGE	By	Date	Qty	Approval Chief Eng / Prod Mgr	Approval QC Inspector

Part No: _____ **PAR #:** _____ **Fault Category:** _____ **NCR:** Yes No **DQA:** _____ **Date:** _____

Resolution: _____ **Disposition:** _____ **QA: N/C Closed:** _____ **Date:** _____

NCR:		WORK ORDER NON-CONFORMANCE (NCR)						
DATE	STEP	Description of NC Section A	Corrective Action Section B			Verification Section C	Approval Chief Eng	Approval QC Inspector
			Initial Chief Eng	Action Description Chief Eng	Sign & Date			

NOTE: Date & initial all entries

H:\fFORMS\Quality Assurance\approved QA\NCRWO RevE

w/o 68677

DEO ATTACHED

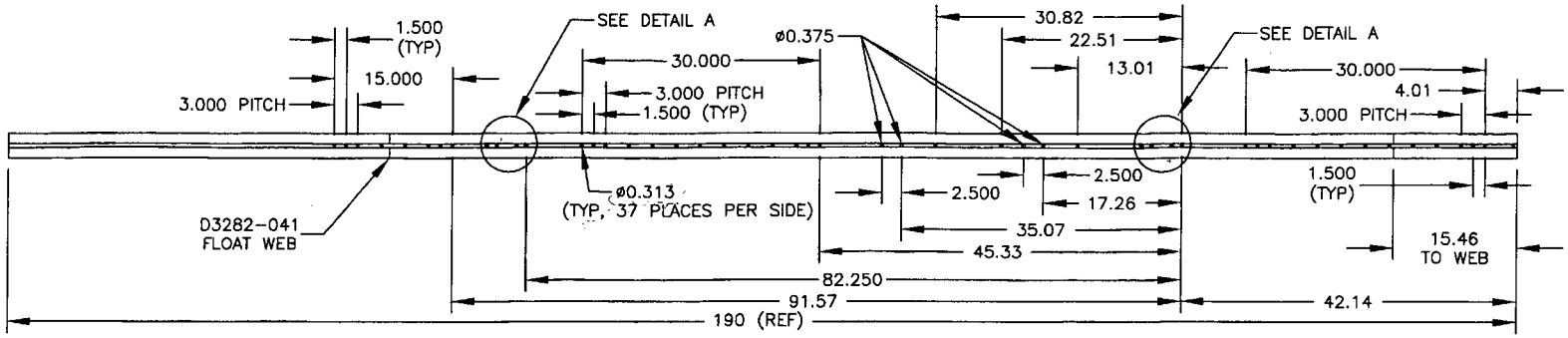

D3274-043 DRILLING/ASSEMBLY DETAIL

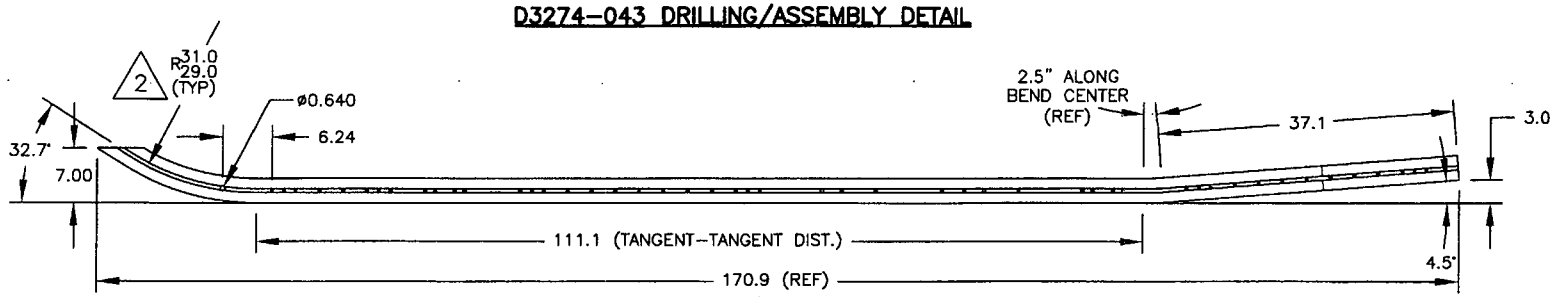

D3274-043 BEND/DRILLING DETAIL

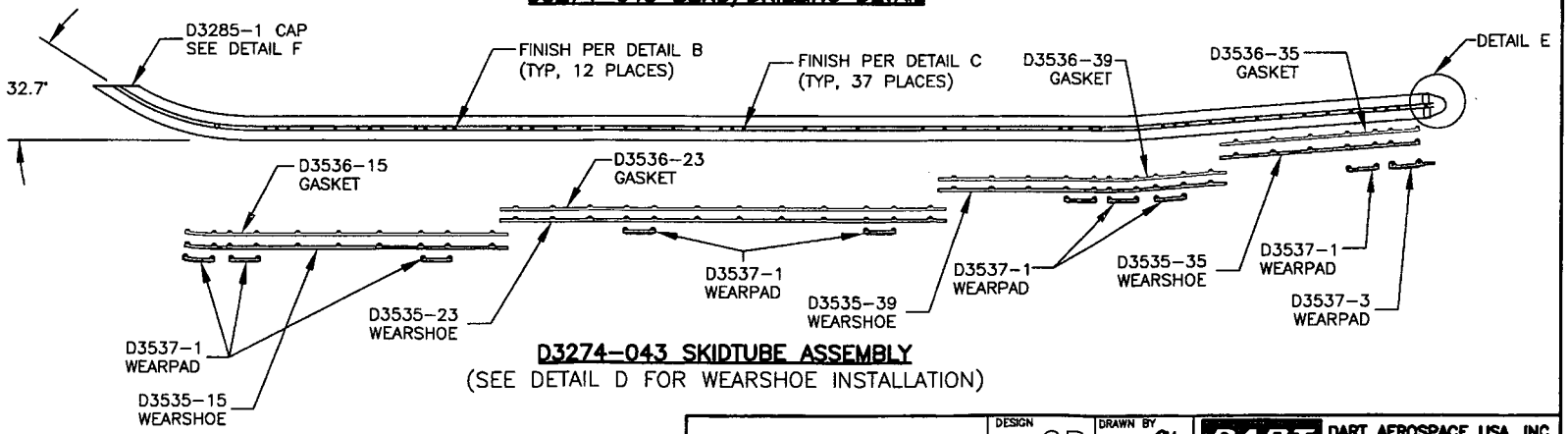

D3274-043 SKIDTUBE ASSEMBLY

(SEE DETAIL D FOR WEARSHOE INSTALLATION)

RELEASED
07.02.12

COPYRIGHT © 2004 BY DART AEROSPACE USA, INC.

THIS DOCUMENT IS PRIVATE AND CONFIDENTIAL AND IS SUPPLIED ON THE EXPRESS CONDITION THAT IT IS NOT TO BE USED FOR ANY PURPOSE OR COPIED OR COMMUNICATED TO ANY OTHER PERSON WITHOUT WRITTEN PERMISSION FROM DART AEROSPACE USA, INC.

DESIGN CP	DRAWN BY PH	DART	DART AEROSPACE USA, INC. PORT HADLOCK, WA
CHECKED	APPROVED	DRAWING NO. D3274	REV. D SHEET 3 OF 4
DATE 06.12.19		TITLE SKIDTUBE ASSEMBLY	SCALE 1:15

Dart Aerospace Ltd

W/O:		WORK ORDER CHANGES					
DATE	STEP	PROCEDURE CHANGE	By	Date	Qty	Approval Chief Eng / Prod Mgr	Approval QC Inspector

Part No: _____ **PAR #:** _____ **Fault Category:** _____ **NCR:** Yes No **DQA:** _____ **Date:** _____

Resolution: _____ **Disposition:** _____ **QA: N/C Closed:** _____ **Date:** _____

NCR:		WORK ORDER NON-CONFORMANCE (NCR)						
DATE	STEP	Description of NC Section A	Corrective Action Section B			Verification Section C	Approval Chief Eng	Approval QC Inspector
			Initial Chief Eng	Action Description Chief Eng	Sign & Date			

NOTE: Date & initial all entries

H:\fFORMS\Quality Assurance\approved QA\NCRWO RevE

w/o 68477

DETAIL A: DRILL DETAIL

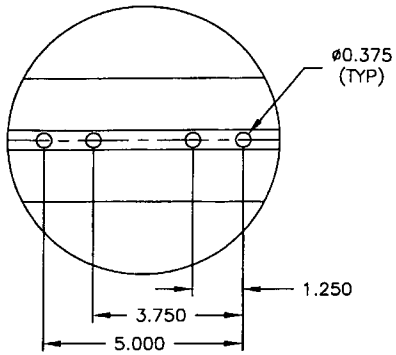

DETAIL B
FOR ø0.375 HOLES ONLY

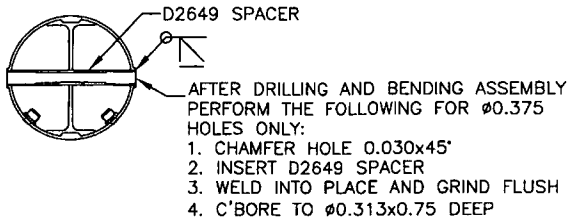

DETAIL C
FOR ø0.313 HOLES ONLY

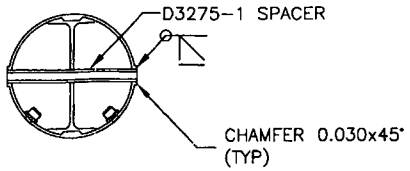

DETAIL D

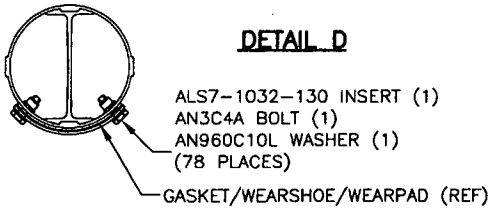

DETAIL F: END FINISHING DETAIL

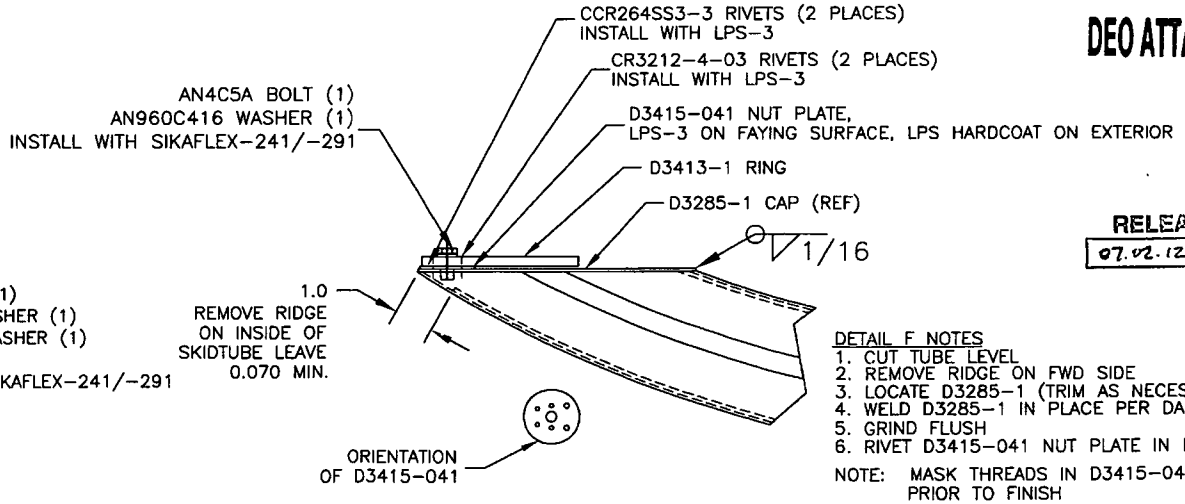

DEO ATTACHED

RELEASED
07.02.12

DETAIL F NOTES
1. CUT TUBE LEVEL
2. REMOVE RIDGE ON FWD SIDE
3. LOCATE D3285-1 (TRIM AS NECESSARY)
4. WELD D3285-1 IN PLACE PER DART QSI 004
5. GRIND FLUSH
6. RIVET D3415-041 NUT PLATE IN PLACE

NOTE: MASK THREADS IN D3415-041 PRIOR TO FINISH

DETAIL E

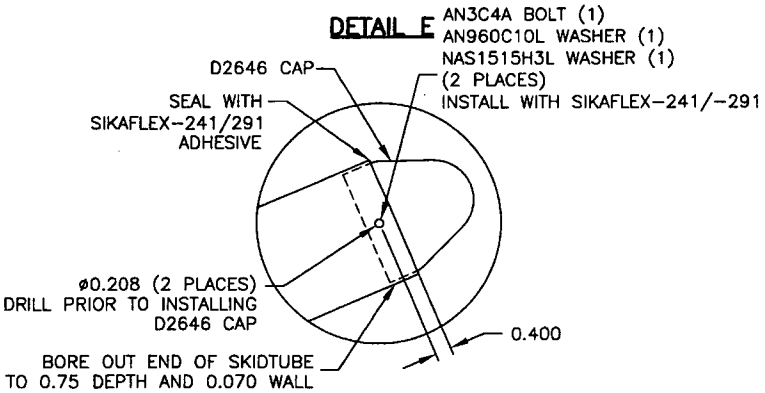

COPYRIGHT © 2004 BY DART AEROSPACE USA, INC.

THIS DOCUMENT IS PRIVATE AND CONFIDENTIAL AND IS SUPPLIED ON THE EXPRESS CONDITION THAT IT IS NOT TO BE USED FOR ANY PURPOSE OR COPIED OR COMMUNICATED TO ANY OTHER PERSON WITHOUT WRITTEN PERMISSION FROM DART AEROSPACE USA, INC.

DESIGN: CP	DRAWN BY: PH	DART AEROSPACE USA, INC. PORT HADLOCK, WA	
CHECKED:	APPROVED:	DRAWING NO. D3274	REV. D SHEET 4 OF 4
DATE: 06.12.19		TITLE: SKIDTUBE ASSEMBLY	SCALE 1:3

Dart Aerospace Ltd

W/O:		WORK ORDER CHANGES					
DATE	STEP	PROCEDURE CHANGE	By	Date	Qty	Approval Chief Eng / Prod Mgr	Approval QC Inspector

Part No: _____ **PAR #:** _____ **Fault Category:** _____ **NCR:** Yes No **DQA:** _____ **Date:** _____

Resolution: _____ **Disposition:** _____ **QA: N/C Closed:** _____ **Date:** _____

NCR:		WORK ORDER NON-CONFORMANCE (NCR)						
DATE	STEP	Description of NC Section A	Corrective Action Section B			Verification Section C	Approval Chief Eng	Approval QC Inspector
			Initial Chief Eng	Action Description Chief Eng	Sign & Date			

NOTE: Date & initial all entries

H:\fFORMS\Quality Assurance\approved QA\NCRWO RevE

DRAWING NO.	TITLE	REV. D	DART AEROSPACE USA, INC ENGINEERING ORDER	D.E.O. NO.	SHEET NO.	SCALE
D3274	SKIDTUBE ASSEMBLY			D3274-D-1	SHEET 1 OF 1	NTS
DRAWN	CHECKED		MFG. APPR.	APPROVED	DE APPR.	
DATE 09.06.17	DATE 09.06.23		DATE 09/06/23	DATE 09/06/23	DATE 09.06.23	

LPS-3 IS NO LONGER USED DURING ASSEMBLY OF SKIDTUBE.

AMEND NOTE 8: "~~SPRAY INSIDE OF TUBE WITH A COAT OF LPS LABORATORIES 'LPS 3' AFTER FINISH AND INSTALLATION OF INSERTS.~~ COAT ALL EXPOSED FASTENERS WITH LPS LABORATORIES 'LPS PROCYON' AFTER FINAL ASSEMBLY, CLEAN EXCESS OFF POWDER COATING WITH MEK DEGREASER."

AMEND DETAIL F AS SHOWN:

w/o 48677

DETAIL F: END FINISHING DETAIL

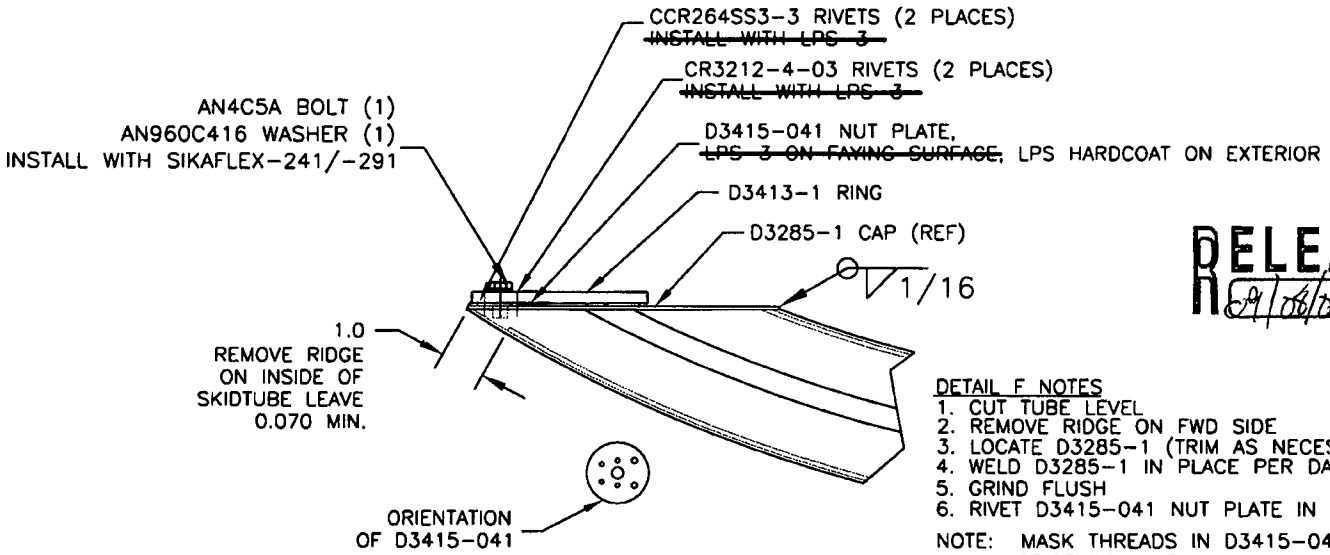

RELEASED 09/06/23

DETAIL F NOTES
1. CUT TUBE LEVEL
2. REMOVE RIDGE ON FWD SIDE
3. LOCATE D3285-1 (TRIM AS NECESSARY)
4. WELD D3285-1 IN PLACE PER DART QSI 004
5. GRIND FLUSH
6. RIVET D3415-041 NUT PLATE IN PLACE

NOTE: MASK THREADS IN D3415-041 PRIOR TO FINISH

COPYRIGHT © 2009 BY DART AEROSPACE USA, INC
THIS DOCUMENT IS PRIVATE AND CONFIDENTIAL AND IS SUPPLIED ON THE EXPRESS CONDITION THAT IT IS NOT TO BE USED FOR ANY PURPOSE OR COPIED OR COMMUNICATED TO ANY OTHER PERSON WITHOUT WRITTEN PERMISSION FROM DART AEROSPACE USA, INC.

Dart Aerospace Ltd

W/O:		WORK ORDER CHANGES					
DATE	STEP	PROCEDURE CHANGE	By	Date	Qty	Approval Chief Eng / Prod Mgr	Approval QC Inspector

Part No: _____ **PAR #:** _____ **Fault Category:** _____ **NCR:** Yes No **DQA:** _____ **Date:** _____

Resolution: _____ **Disposition:** _____ **QA: N/C Closed:** _____ **Date:** _____

NCR:		WORK ORDER NON-CONFORMANCE (NCR)						
			Corrective Action Section B					
DATE	STEP	Description of NC Section A	Initial Chief Eng	Action Description Chief Eng	Sign & Date	Verification Section C	Approval Chief Eng	Approval QC Inspector

NOTE: Date & initial all entries

H:\fFORMS\Quality Assurance\approved QA\NCRWO RevE

Work Order Summary

Monday, July 18, 2011 10:11:56 AM

Criteria : Work Order ID: 68677 Item ID: D206-642-545 Product Family SKIDTUBES
Work Order Start Dates 4/19/2011 to 4/19/2011 11:59:59 PM Work Order Required Dates 5/16/2011 to 5/16/2011 11:59:59 PM
All References
Work Order Status Released

Work Order ID	68677	**Required Qty**	1.0000	**Status Code**	Released
Item ID	D206-642-545	**Accepted Qty**	0.0000	**Scrap Qty**	0.0000
Item Name	Skidtube				
Current Acct Value	$1,621.677	**Sales Order ID**			
Start Date	4/19/2011	**Required Date**	5/16/2011	**Completed Date**	

Standard	** Actual **		** Acct. Value **	** Variance **	** Variance % **
Direct Costs	**Total**	**Each**	**Each**	**Each**	**Each**
Material	$0.000	$0.000	$191.972	$191.972	100.00%
Labor	$73.070	$0.000	$590.990	$590.990	100.00%
Outplant	$0.000	$0.000	$0.000	$0.000	0.00%
Variable Burden	$0.000	$0.000	$0.011	$0.011	100.00%
Fixed Burden	$96.924	$0.000	$838.703	$838.703	100.00%
Material Burden	$0.000	$0.000	$0.000	$0.000	0.00%
** Total **	$169.995	$0.000	$1,621.677	$1,621.677	

Work Center HandFinish

Employee ID	Rout Seq ID	Labor Date	Setup Hours	Actual Setup Hours	Labor Hours	Actual Labor Hours	Nbr of WOs	Setup Amount	Labor Amount	Fix Burd Amount	Var Burd Amount	Total Amounts
EWER02												
		6/17/2011										
	120		0.00	0.00	0.47	0.23	2.00	$0.000	$3.902	$4.253	$0.000	$8.154
		Total:	0.00	0.00	0.47	0.23	2.00	$0.000	$3.902	$4.253	$0.000	$8.154

Work Center Skidtubes

Employee ID	Rout Seq ID	Labor Date	Setup Hours	Actual Setup Hours	Labor Hours	Actual Labor Hours	Nbr of WOs	Setup Amount	Labor Amount	Fix Burd Amount	Var Burd Amount	Total Amounts
BURY01												
		6/15/2011										
	110		0.00	0.00	1.45	1.45	1.00	$0.000	$29.899	$40.059	$0.000	$69.958
ELLI01												
		6/2/2011										
	110		0.00	0.00	0.68	0.68	1.00	$0.000	$13.981	$18.731	$0.000	$32.712
LEGE01												
		5/30/2011										
	110		0.00	0.00	0.82	0.82	1.00	$0.000	$16.935	$22.689	$0.000	$39.624
PAQU03												
		5/26/2011										

110		0.00	0.00	3.64	0.40	9.00	$0.000	$8.354	$11.193	$0.000	$19.547
	Total:	0.00	0.00	6.58	3.35	12.00	$0.000	$69.169	$92.672	$0.000	$161.840

NO. 291

AWS D17.1.2001
QUALIFICATION TEST RECORD

Name: Barclay Elliott
Job number: 83400
Part number: A206-642-541
Description: Skidtube
Welding Process: Tig[✓] Mig[ ]
Base materiel: Alum.
Current: AC[✓] DC[ ]

TEST REQUIREMENTS AND RESULTS

Visual:	pass[✓]	fail[ ]
Penetration:	pass[✓]	fail[ ]

UNACCEPTABLE

Cracks:	pass[✓]	fail[ ]
Undercut:	pass[✓]	fail[ ]
Pin holes:	pass[✓]	fail[ ]
Overlap (cold lap)	pass[✓]	fail[ ]
Porosity (surface):	pass[✓]	fail[ ]
Coloration:	pass[✓]	fail[ ]

Qualifier [signature] **Date of Test Coupon** 12.04.26

Welder [signature] **Date of Test Coupon** 12.04.26

The above named individual is qualified in accordance with AWS D17.1.2001 to weld